YATIAN

Guangdong Yatian Industrial Co., Ltd.

Manual of Electric Vehicle



Foreword

Guangdong Yatian Industrial Co., Ltd is a professional company, manufacturing different kinds of electric vehicles over decades. We engaged in developing, design, production, sales and after-sales service of various types of electric vehicles, and providing environmental-friendly electric vehicles for golf courses, tourist attractions, luxury hotels, resorts, luxury villas, commercial pedestrian street, community, factories, schools, airports and hospitals etc. Thanks for your trust in our company!

The main technical parameters, assembly of the relevant vehicles, maintenance and care, troubleshooting and warranty and so on for LY05B electric vehicles are described in this manual.

The parameters listed here are only for the existing leading models. For any change to the parameters or launching of new products, we will give additional description. The data and structure of vehicles in this manual are only for reference for maintenance and will not be used as the basis for acceptance of products.

This electric vehicle is non-highway vehicle, and professional persons shall be responsible for driving and maintenance. We wish you read this manual carefully before using of YATIAN products and use and maintain the vehicles strictly in accordance with the provisions in this manual, to ensure the normal service life of the vehicles. products meet the Q/YT 1-2022 standard.

This manual is an integral part of the vehicle and should be stored and used together with the vehicles during the service life. For any issues on warranty and purchasing of spare parts of relevant series of electric vehicles etc, please contact the after-sale department: +86 20 87671260 or +86 138 2625 1408

Keep this manual well for reference.

Warning

●Accept training before operating this vehicle for the first time to avoid any accidents!

●The electric vehicles can only be driven by persons with license and accepting training!

●Release the hand brake completely after start the vehicle!

●Accelerate slowly after starting the vehicle!

●Do not press the accelerator pedal and brake pedal at the same time to avoid damage to the control system or burn out of the motor, or even accidents!

●Drive the electric vehicles carefully as running on roads covered with water, to avoid splash of water onto the electrical parts!

●No water can contact electrical parts of YATIAN electric vehicles, especially for the controller and motor. Be carefully during cleaning!

●Never operate YATIAN electric vehicles in flammable or explosive places!

●Charge in time as the indicator of the battery points to the lowest bar (The LED will flash for alarm) to avoid damage to the battery!

●Do not touch the charging plug, for 48V power may bring injury to human bodies!

●Overload will cause major accidents!

Table of Contents

Chapter I, Appearance and Main Technical Parameters……1
1. Appearance……1
2. Vehicle Identification ……7
3. Main technical parameters…… .8
Chapter II Instrument Panel and Controls……12
1. Arrangement of Controls……12
2. Instrument panel……14
3. Electrical switches…… ……16
4. Parking brake and manipulation system……17
Chapter III Driving Safety Rules……19
1. Training……19
2. Operation Procedure……20
3. Precautions……21
Chapter IV Preparation and Care……23
1. Inspection of new vehicle……23
2. Running-in……24
3. Maintenance and Care……25

Chapter V Failure Analysis and Troubleshooting……..…45
1. Diagnosis of Electrical Faults……...……..45
2. Diagnosis of Mechanical Faults……..……...47
Chapter VI Electrical Schematic of Classic Cars……...……...48
Chapter VII Sheet of Monthly Maintenance……..……...49
Chapter VIII Warranty……...51
1. Scope of responsibility……....51
2. Items uncovered in the warranty range…… ..52
Chapter IX List of Accompanying Accessories……53

Chapter I, Appearance and Main Technical Parameters

1 Appearance

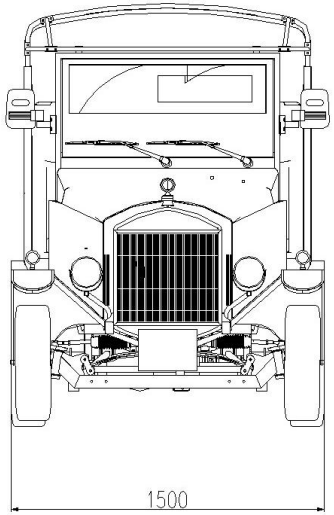

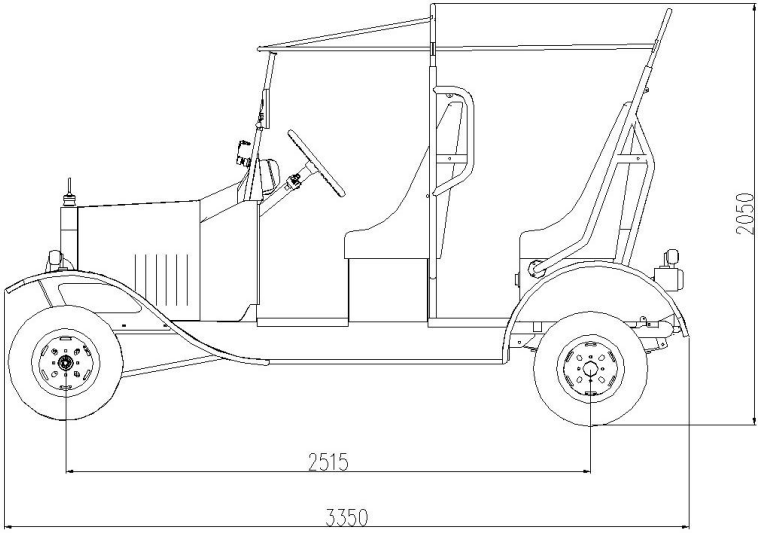

2 Vehicle Identification

GUANGZHOU GUANGBEN LOCOMOTIVE TECHNOLOGY CO.,LTD

L7e-CP

e9*168/2013*16270

LWJAHCZ1?????????

--- dB(A) — --- min^{-1}

4.6 kW 35 km/h max 1005 kg

3 Main technical parameters

3.1 Classic Car Series

LY05B					
Basic parameters of the vehicle					
No.	Item			Unit	Parameters
					LY05B
1	Dimensions	Overall dimension	Length	mm	3350
			Width		1500
			Height		2000
		Wheelbase			2515
		Tread	Front		1290
			Back		1300
2	Number of passengers			persons	4
3	Mass	Mass in running order		kg	446
		Actual Mass			737
		Max gross mass			1005
4	Minimum turning radius			mm	4100

5	Pass capacity	Min ground clearance	mm	170
6	Power capacity	Top speed	km/h	35
		Max Climbing Capability	%	30
7	Braking capacity	Braking Distance (m) (Full-load at original speed of 20km/h)	m	≤5
8	Parking Gradient		%	15
9	Static Stable Roll Angle		（°）	35
10	Color (Option)			Rich red, Nobel White, Classic Black

Chapter II Instrument Panel and Controls

Arrangement of Controls

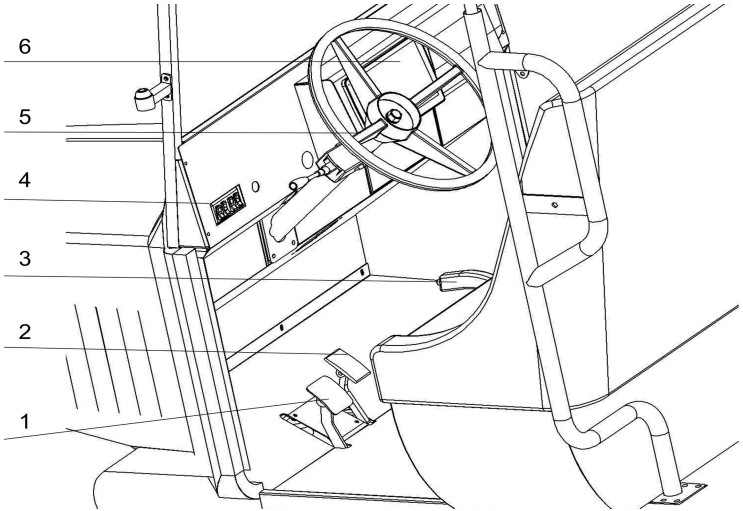

1, Brake pedal 2. Accelerating pedal 3. Parking brake 4. Switch combination

5. Steering wheel 6. Instrument panel

2 Instrument panel

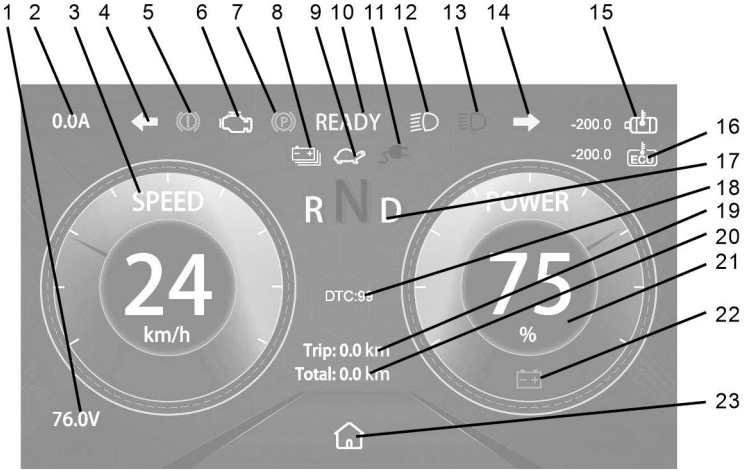

1. Rated voltage
2. Real-time driving current
3. Driving speed
4. Left turn indicator light
5. Braking failure indicator light
6. Power failure indicator light

7. Parking brake indicator light
8. Low battery indicator light
9. Performance limitation indicator light
10. READY
11. Charging indicator light
12. Low beam indicator light
13. High beam indicator light
14. Right turn indicator light
15. Motor temperature indicator
16. ECU temperature indicator
17. Gear position indicator light
18. Fault code
19. Single driving mileage
20. Total driving mileage
21. Real-time power consumption display
22. Low power indicator light
23. Initial interface

3 Electrical switches

1、Key switch

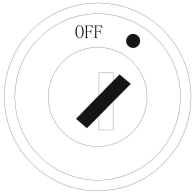

● OFF: Cut off power supply for the vehicle, the electric vehicle stops

● Turn right to the Red dot position to connect on the power supply, the vehicle begins to work.

2、Direction switch Head lamp and turn lamp switch

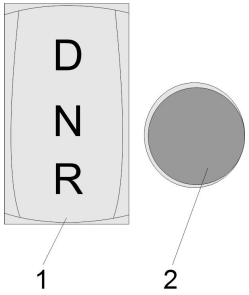

1.Shift lever

“D”: Forward

"N": Neutral

"R": Reverse

2.Secondary power switch (Turn on the power by pressing this switch after opening the key switch)

3、 Head lamp and turn lamp/horn

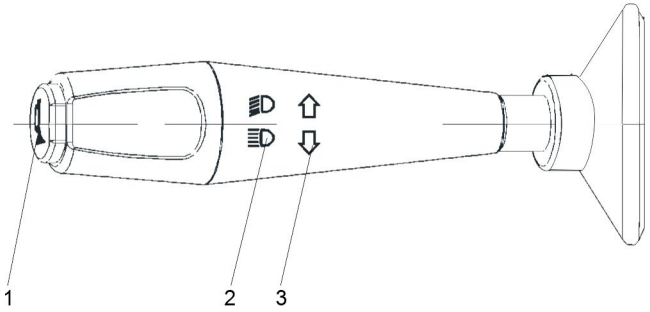

1.horn switch

2.Head lamp switch

3.turn lamp switch

4 Parking brake and manipulation system

The parking brake is as shown in the following figure and operated as following:

1, Parking: Pull the control lever upward, so that the pawl stops between the 3rd to 6th teeth, and the rear wheel is braked.

2, Release the brake: Hold and pull the control lever upward and press the button at end of the lever with the thumb slightly to unlock, so as to push the control lever to the bottom, the rear wheel is released.

3, Release the parking brake completely during running, and engage it tightly for parking.

Others:

Steering wheel: Control the direction during running.

Clutch pedal: Control the clutch for starting of the vehicle and gearshift. (Models with transmission)

Brake pedal: Control deceleration or parking of the vehicle.

Acceleration pedal: Control the running speed.

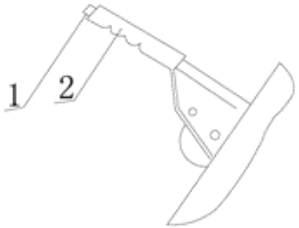

1. Button 2. Control lever

Chapter III Driving Safety Rules

1 Training

For the electric vehicles can only be driven by persons with driving license, so all drivers shall accept relating training, including:

- Safety awareness training, emphasis on personnel/vehicle safety;
- Obey safety rules in the manual;
- Operate the control system properly;
- Familiar with routine maintenance and troubleshooting
- Faults analysis and troubleshooting;
- Driving training based on actual environment and road conditions;
- Road driving and other tests.

2 Operation Procedure

Operation of electric classic cars:

1、Insert the key into the key switch and turn it to "ON" position;

2、Check the road in travel direction for any obstacles. Set the direction switch at Forward or Reverse position;

3、Release the parking brake and press the accelerator pedal slowly, the vehicle accelerates and runs;

4、To stop, release the accelerator pedal and press the brake pedal using right foot slowly, the electric vehicle decelerates and stops;

5、Engage the parking brake after the vehicle stops.

▲Note: If the accelerator pedal is pressed first before unlocking of the electric lock, the vehicle will not run. Release the pedal first and press the pedal again, the vehicle will run. Such function is designed for protection of the vehicle, so as to avoid sudden running of the vehicle as the electric lock is unlocked.

▲ Note: To change the travel direction (forward or reverse) of the vehicle, stop the vehicle and wait until the vehicle is still. Never change the direction suddenly during driving of the vehicle, so as to avoid damage to the direction switch, direction-changing contact or motor.

3 Precautions

- Only trained persons can drive the electric vehicles;
- Check the reading of instruments before driving. Check the lighting and signaling lamp;
- Check if the electrical system, connectors and the plug-ins contact reliably. Check the accelerating pedal;
- Check the brake liquid level, service brake, parking brake and steering system;
- Make sure all passengers hold the handrails firmly before starting of the vehicle;
- Comply with the steps for driving of vehicles;
- Never put your head outside the vehicle during running;
- Prompt the passengers to hold handrails before turning/running-downhill to avoid accidents;
- Any child passengers shall be cared by adults to avoid accidents;
- Decelerate and drive carefully on wet or complex road or crowded;
- Decelerate and brake carefully during turning or running on slopes to avoid accidents;
- No overstaff, overload or overspeed;
- Driving after drinking or taking drugs are forbidden;
- As the vehicle runs through the road covered with water, water may penetrate the brake drum, impacting the braking system. Press the brake pedal briefly after passing through the area with water to check the braking capacity. In case of braking failure, press the brake pedal for several times, until the brake is normal;
- In case of abnormal sound, smell or failure during running, stop immediately and troubleshoot before

driving again;

- Never press the accelerator pedal suddenly or frequently to ensure normal lifetime of the accelerator and control system;
- Never operate the vehicle in flammable or explosive place;
- Park the vehicle on even road as possible; fix the wheels using a wedge for parking on the slope;
- Engage the parking brake before leaving the vehicle, and put the direction lever at neutral position. Turn off and pull out the key switch;
- Store the machine indoor; if it is stored outdoor in rainy days, rain will enter the vehicle and cause failure of electrical parts, and mechanical parts may be rusted, shortening the service life of the vehicle.

Chapter IV Preparation and Care

1 Inspection of new vehicle

All vehicles are tested strictly before ex-factory, but the vehicle is in non-normal state during transport to the customer's site, and the system may be impacted. In order to ensure safe driving, conduct the following inspections before the new vehicles are put into operating:

- Check if all connections are tight, especially nuts fixing the steering, transmission, braking, suspension and wheels.
- Check the pressure of the tire and for any damage.
- Check the level and density of electrolyte of the battery and check for any leakage.
- Check the brake system and rear axle for leakage.
- Check the wire harness and other friction parts for damage. Check the earth iron.

2 Running-in

No fine running-in is necessary for your vehicle. Yet to prolong the service life of the vehicle and enhance the economy, we recommend that you follow our suggestions within the first 1,000 kilometers.

- Avoid sudden start or acceleration.

Select the gearshift properly (models with transmission).

- Never press the accelerator pedal to the bottom at any gear.
- Avoid emergent braking within the first 300 km.
- Check if the battery, electric controls and motor connecting cables are loosen or hot frequently. Tighten if necessary.
- Measure the temperature of transmission, rear axle final drive and brake drum. If they are too hot (more than 30℃), check and troubleshoot.
- Deep discharging of the battery is forbidden during running-in period; and over-discharging is not allowed after running-in period, so as to ensure normal lifetime of the battery.
- Check the steering system, front suspension and nuts after first 500 km; tighten if necessary; check the pipelines of the brake system for leakage. Troubleshoot immediately if any.
- Replace the transmission and rear axle grease after 1000 km running-in period.

3 Maintenance and Care

Regular maintenance and care shall be conducted for all vehicles and make records, which is important to ensure normal lifetime of vehicle, reduce usage cost, enjoy the driving pleasure and guarantee safety. We will give training and demonstrating care for the customers free of charge as delivery of the vehicles for proper usage, maintenance and care; the customer will conduct later maintenance and care (or by our after-sale service department, but the service fee will be charged).

Prevention for maintenance and care

- In clean and safe place with proper ventilation and fire prevention devices.
- Cut off the power supply before maintenance, pull out the keys and engage the parking brake; to check electrical controls and motors, disconnect the battery cable to cut off the mains power and avoid short circuit.
- Do not stay under the vehicle as the vehicle is raised by a jack.
- Handle the battery carefully, for the battery contains flammable and explosive gases and corrosive sulfuric acid.
- No smoke or fire near the battery.

Maintenance items

- Maintenance and adjustment of steering system.
- Check and replace the grease for rear axle main reducer and transmission.
- Check the components of drive shaft.
- Tighten the suspension bolts.
- Check and adjust the brake system.
- Tighten the fastening nuts of tire. Check the pressure of tire and condition of tire pattern.
- Routine maintenance of electrical part. Daily cleaning of vehicles.

List of scheduled maintenance items

Maintenance notations: A = check, correct and replace if necessary; R = replace; C = clean and care.

The hours in the table are the accumulated working hours for the vehicle.

Items	Every week (or 20h)	Every month (or 80h)	Every quarter (250 h)	Every half year (or 500 h)	Every year (or 1,000 h)
Free angle of the steering wheel			A		
Ball nuts fixing transverse steering link			A		
Ball pins and dust cover			A		
Steering components and brackets			A		
Lubrication of steering system steering knuckle				A	
Front-wheel toe-in			A		
Grease of rear axle main reducer				A	R
Grease of transmission				A	R
Fastening bolts of drive shaft			A		
Drive shaft cross bearing				A	
Spline of drive shaft				A	
Front shock absorber with spring assembly			A		

Front suspension with oblique link assembly			A		
Front suspension connecting components			A		
Rear leaf spring eye bolts			A		
Rear leaf spring U-bolts			A		
Level of brake fluid reservoir		A			
Leakage of brake lines and fittings		A			
Brake friction plate and drum		A			
Service brake and parking brake		A			
Tire pressure	A				
Wearing of tire	A				
Tire tread pattern		A			
Tire fastening nut	A				
Alternate usage of tires			A		
Level of electrolyte of battery	A				
Density of electrolyte of battery		A			
Battery pole fastening bolts	A				
Battery pole and exterior surface	A				

Connections for electrical controls for the motor		A			
Motor mounting bolts and nuts			A		
Dirt, fouling and carbon on motor				C	
Motor bearing				C\A	
Wearing of motor brush				A	
Lamps, horn and rain wiper		A			
Cleaning of vehicle	A				

1、 Maintenance and adjustment of the steering system

- Apply grease on the steering system every half year, using 3# lithium-base grease;
- Check the transverse steering link ball nuts every three months, and tighten if necessary, to avoid excessive free swing or direction lag of the steering wheel;
- Check the dust cover of the link joints for break every three months. Water or dust may enter the broken dust cover, causing abrasion of ball joint and steering failure. Replace any broken dust cover immediately;
- Check the steering components connecting bolts and mounting brackets every three months, and tighten in time;
- Check whether the free swing angle of the steering wheel is 15° or less every three months, adjust if necessary.

Check the free swing angle of the steering wheel

Park the vehicle. Keep the front wheel forward. Turn the steering wheel carefully, and adjust if the free swing angle is greater than the rating, as shown in Figure 2.1.

Note: Just turn the steering wheel slowly.

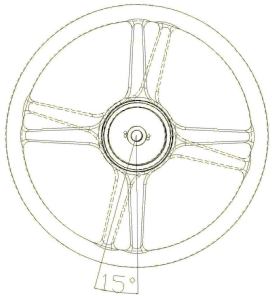

Figure 2.1

Check front wheel toe-in

Criteria: load 3 ± 1mm

Measuring steps:

- Swing the vehicle up/down to keep the suspension stable;
- Keep the two front wheels in straight line on even ground
- and drive for 5m;
- Mark the center of the rear tread of the two front wheels.

Measure the distance B between the left/right marks, see Figure 2.2;

- Push the vehicle forward, so that the mark at the back of the
- tire moves to the front at same height, see Figure 2.3;
- Turn the tire mark to the front. Measure the distance A

between the left/right marks, see Figure 2.4;

- If the toe-in is not within the limit, adjust the length of
- left/right across pull rod. Calculate the toe-in: toe-in = B-Amm.

Adjust the toe-in:

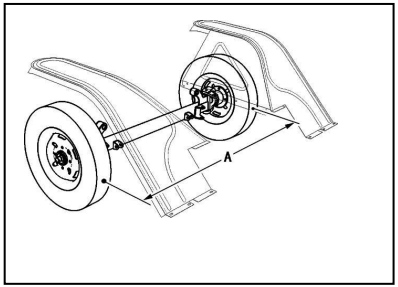

Figure 2.2

move the vehicle forward



Figure 2.3

- Loosen the locking nut at end of the steering across pull rod;
- Turn the left/right across pull rods at the same time to adjust the toe-in so as to meet the standard;
- Tighten the locking nut of the steering across pull rod.

Note: Measure the length of left/right steering across pull rods, which shall be equal; and the error shall not exceed 3mm.

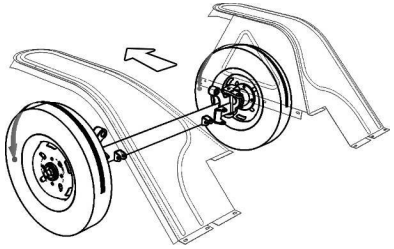

Figure 2.4

2、 Check and replace the grease of rear axle main reducer

Check the level

- Check the level of rear axle grease every half year;
- To check the oil level, park the vehicle on even ground;
- Remove the oil plug. Check the level with your fingers.

The upper limit is 5mm above the bottom of right hole. If the level is right, tighten the plug;

- Close the oil plug, and check the rear axle for leakage

or damage visually;

- If the level is low, add proper quasi-hyperbolic gear oil,

and then tighten the plug;

Note: Only use oil of brand GL-4 or GL-5, and the viscosity is SAE90#.

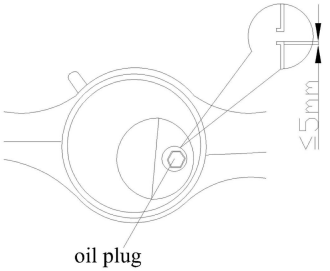

Figure 3.1

Change the oil

- Change the oil of rear axle case every year;
- To change the oil, park the vehicle on even ground;
- Loosen the drain plug first and discharge the gear oil. Clean the drain plug and re-install, as shown in Figure 3.1;
- Remove the fill plug. Fill in gear oil via the filler until up to the limit.
- Remove and tighten the drain plug;

Note: Only use oil of brand GL-4 or GL-5, and the viscosity is SAE90#.

3、 Maintenance and care of the transmission system

Check the drive shaft and rear axle connecting bolts every three months. Add grease on the drive shaft cross bearing every half year. Check the drive shaft spline every half year and add grease as necessary; only use grease of 3# lithium-base grease.

4、 Maintenance and care of the suspension system

Check fastening bolts and nuts of front/rear suspension system every three months. Tighten in time if necessary.

5、 Maintenance and care of the brake system

Adjustment of front/rear axle brake drum/shoe clearance

Adjust the ratchet of the brake drum downward for 4 to 5 teeth. Turn the wheel drum by hand, no delay will occur, as shown in Figure 6.1.

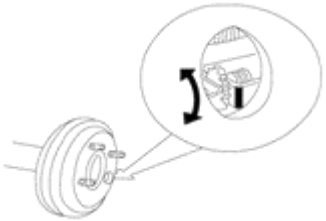

Figure 6.1

Check the level of brake fluid reservoir

Note: To ensure traffic safety, the level of brake fluid reservoir shall be between the Max and Min. limit, as shown in Figure 6.2

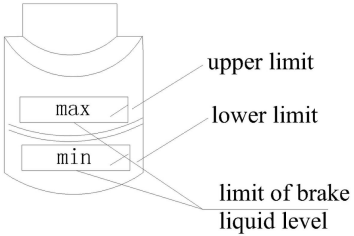

Figure 6.2

Inspection and replacement of brake pipe

Hose: Check for any damage. Check the case for crack, scratch, leakage and air bubbles. Replace in time if any.

Steel pipe: check the steel pipe for damage, crack, marks and corrosion. Replace in time if any.

6、 Maintenance and care of tire

Pressure of tire

Too high/low pressure of tire will lead to abnormal abrasion. Normal pressure of tire: 300kpa for 145/70R12, and 350kpa for 155/70R13.

The depth of tire tread groove should be 1.6mm or above. Replace the tire if necessary. Check the tire for nails, stones or other objects punching through the tires, see Figure 7.1.

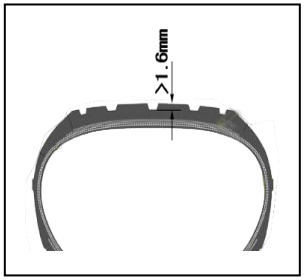

Figure 7.1

After mounting the nuts onto the tire (taper end inward), tighten by hand first, and push the tire inward to see if the nuts can be tighten additionally; tighten the nuts using tools in order as shown in the figure. Tighten the nuts for several turns each time. Tighten the nuts alternately until all nuts are tightened, as shown in Figure 7.2



Figure 7.2

To keep uniform abrasion of the tire, and if size and layers of all tires are the same, exchange the tire every half year. Exchange the tire at the same time as changing the tire, so as to ensure long lifetime of the tires. To change the tire, check the abrasion of tire first. Usually abnormal abrasion is caused due to

abnormal tire pressure, or the tread is not aligned properly, and the wheels are out of balance or due to sudden braking. After exchanging of the tires, the air press of the front/rear tires must reach the specified value. Check the wheel nuts and tighten as necessary.

Exchange of tire:

4W

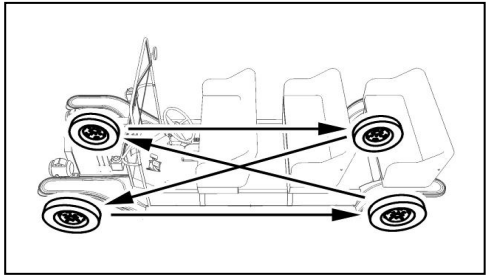

5W

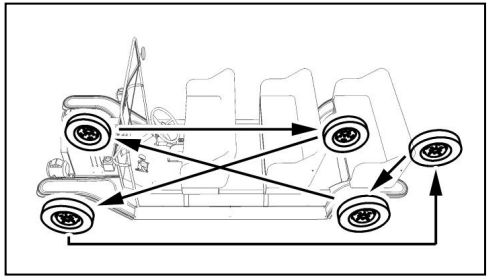

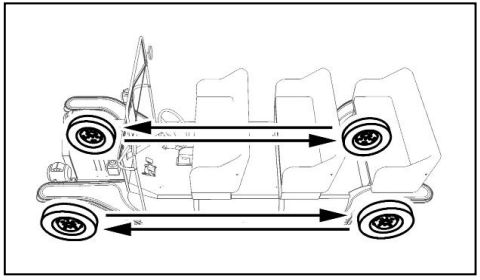

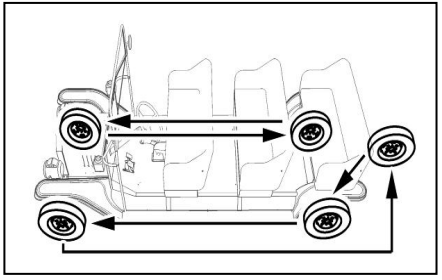

7、 Operation and maintenance of the motor

The motor provides the only power for the electric vehicles. Proper usage of the power equipment is the prerequisite to keep smooth running of the vehicle. To reduce failures and ensure normal lifetime of the motor, the normal operating conditions and maintenance and care of the motor are described in the following.

The motor shall operate normally under the following conditions:

- Altitude not more than 1200m;
- Ambient temperature: -25℃ to 40℃;
- Relative humidity up to 100%, with condensation at the surface of the motor.

Operation and maintenance of motor:

- Cut off the power supply before any maintenance tasks, so as to avoid accidents.
- Connect on the power for the series motor and keep it run with no-load is forbidden. If it is necessary to keep it run with zero load, the voltage of power for the motor must be 15% lower than the rated voltage.
- The cooling air should not contain explosive or corrosive gases.
- Top temperature of bearings: 95℃.
- Open the access cover regularly and check the internal parts for deformation. Check the surface of commutator and wearing of the brush; stop immediately in case of any abnormities, and maintain and care before operating again.
- The maximum operating voltage of the motor is 1.1 times of the nominal voltage of series battery, and

the minimum working pressure is 0.75 times of the nominal voltage.

- The maximum allowable short-time overload current of the motor is 3 times of the rated current, and the overload torque at this time is 4.5 times of the rated torque, and the duration shall not exceed 1min.
- Abnormal usage such as overload or immersing in rain etc is forbidden.
- Remove the dirt, fouling and carbon deposits on the motor regularly (every half year), so as to ensure normal work and radiation of the motor.
- Clean/replace the bearings regularly (every half year). Apply 3# lithium-base grease in the roller after cleaning.
- Check the wearing of brush regularly (every half year). In case the height (H) of any one of the four brushes is less than 12mm, replace all the brushes.
- Check the motor connecting cable every month and tighten immediately if necessary.

9、Operation and maintenance of the electronic control assembly

- Cut off the power supply before any maintenance tasks, so as to avoid accidents.
- The electronic controls will generate heat during working. It is forbidden to place newspapers or rags on the electric controls so as to guarantee normal radiation.
- Be careful during cleaning of the vehicle. Avoid splash of water onto the electronic controls.
- Check the electronic control connecting cable every month and tighten immediately if necessary.
- For replacing the motor and connection of wires, be careful and connect the armature terminal and excitation terminal correctly. If the armature wire is connected with the excitation terminal by mistake, or connect the excitation wire to the armature terminal, the electronic control may be damaged.

- Turn off the key switch and pull out the key before charging the battery, to ensure that the charging circuit is completely separated from the electronic controls, for the overvoltage generated by the charger will damage the electric controls.
- Check the pedal micro switch every three months. No resistance shall exist as the micro switch is closed, and clear sound will be heard as it is released.
- Never press the accelerator pedal suddenly or frequently to ensure normal lifetime of the accelerator and the control system.

10、Maintenance and care of battery

The battery group consists of a number of cells in series, designed to provide power for the electric vehicles. The operation and maintenance is important for the battery, which will directly affect the lifetime of battery and the mileages of the vehicle.

Discharging of the battery during normal operation

- To ensure normal lifetime of the battery and avoid deep discharging of more than 80% of the capacity, stop discharging when the point of the voltage meter is within the yellow area or the last bar of the electricity meter begins to flash; after discharging, the terminal voltage of single 6V battery shall not be lower than 5.4V, and the density of the electrolyte shall not be lower than 1.13g/cm^3. Charge immediately after discharging.
- If the battery is discharged over the limit, it will take more time to charge and much difficult. Moreover, the battery will start from a low value for next discharge, and such cycle will lead to failure of the battery.

- Charge the battery as soon as possible after deep discharging; we recommend that you charge the battery within one day after discharging. Moreover, if the battery is discharged for more than 80% of the rating, the lifetime of the battery will be short.
- Turn on the emergency switch before charging,6-8 hours charging time every time.
- When a vehicle is not used for a long time, it is necessary to charge it regularly (lead-acid batteries should be charged once a month, and lithium batteries should be charged once every three months)

Charging (normal) of the battery during normal usage

- It is recommend to stop using the battery and let it cool down for some time before charging.
- Only the original charger can be used, and the charger of the same model can be used for the battery group. Chargers of other models shall not be used.
- Engage the parking brake charge before and during charging, and the direction lever shall be put at Neutral position. Turn off the key switch and pull out the key.
- Open or remove the battery drain plug and cover plate.
- As the charger is powered off, insert the plug of the charger into the battery socket firmly.
- Insert the power plug of the charger and turn on the switch, the battery will be charged automatically.
- The charger will shut down automatically after completion of charging.
- Turn off the switch of the charger first and then pull out the charging plug; close the battery drain plug and top cover.

Charging of batteries after long-time storage or for occasional application

- The battery will discharge automatically as it is not used, which will reduce level of the battery, resulting in polar plate sulphurating, impacting the lifetime of the battery after long time.
- To store the battery for long time, charge it fully and keep in dry cool place. Charge the battery at least every month.
- Before using of batteries after long-time storage, charge them again and check the density of electrolyte and the level.

Maintenance and care of battery

- Maintain the battery using tools with insulated handles to avoid short-circuit of the battery and injury to human body. The electrolyte is toxic and corrosive sulfuric acid solution, so it is necessary to wear personal protective facilities, such as rubber aprons, gloves, boots and protective glasses etc., especially eye protective measures.
- Charge the battery each time after discharging.
- Check the level of electrolyte after charging. And if necessary, add distilled or deionized water until up to the nominal level.
- No sulfuric acid solution, tap water, river water, well water or other liquids containing foreign articles are allowed in the electrolyte.
- No metal or other foreign articles shall fall into the battery to avoid short circuit, excessive self-discharging, or affecting the lifetime of the battery.
- No not place metal conductive objects on the battery to avoid short circuit or even burning out of the battery.
- Check the battery pole fastening bolts every week, and tighten if necessary.
- To avoid leakage and pole terminal oxidation and corrosion, keep the battery clean and dry.
- Measure and record the density of electrolyte before/after charging of the cell at least every month; if the measurement is not in the normal range or much different from the previous measurement, notify our after-sales department for further testing and maintenance.

- Perform equalizing charging (charge with small current after normal charging) of the battery once or twice a month.

11、**peration and maintenance of the charger**

- Keep the charger in a safe place free of dust, corrosive gases and rain, and the temperature shall not be higher than 40℃.
- Power supply for the charger: 1-phase AC 220V50HZ. The cross area of input wire for charging of single-group of batteries shall be 4mm^2 or more, and the current of power switch is 16A. The earth line of outlet should be grounded well: The cross area of input wire for charging of dual-group of batteries shall be 6mm^2 or more, and the current of power switch is 32A.
- Do not open the case during charging. Non-electrical staff is strictly prohibited to open the case.
- If the voltage of grid is too high or low during charging, that is, outside the range of 180-260V, shut down the charger immediately, and re-charge after the voltage returns to normal range; or use an AC voltage regulator.
- Never extend or replace the output cable.
- Do not block the inlet and outlet of the charger.
- Disconnect the power cord and charging plug before handling the charger.
- The charger manufacturer have set the corresponding charger based on the voltage grating and the capacity of the battery of the vehicle, that is, different charger is set for batteries of different voltage grating or capacity; identify clearly and only use the proper one.

- The charger will begin equalizing charging automatically within 10h after normal charging is completed (the end of input power is open);
- In case of abnormal sound or smell during charging, disconnect the power plug. For repairs, call our after-sale department.

12、Cleaning of vehicle

- Remove the dirt on interiors using sponge or soft cloth dipped with neutral detergent or low concentration soapy water, and then clean using clean water.
- Remove the exterior of the body with running water, or wet sponge. Do not wipe using hard objects to avoid damage to the surface paint.
- Pay attention to the electrics, especially the motor and electrical controls etc during cleaning. Avoid entering of water, otherwise damage to electrical components will occur.

Chapter V Failure Analysis and Troubleshooting

1 Diagnosis of Electrical Faults

Fault	Reason	Measures
No indication of voltage meter after turning on the key switch, and the vehicle can't run	Key switch circuit open	Repair/replace
	Circuit connection loosen or open	Tighten the fittings or connect the wires
	Battery connector loosen and oxidation	Clean the connector and re-tighten
	Fuses of control circuit or main circuit blown	Replace
Indication of voltage meter correct after turning on the key switch, but the vehicle can't run	Program error	Refer to Safe Driving Rules
	Accelerator failure	Check failed parts, repair/replace
	Travel direction switch damaged	Repair/replace
	Main contact or direction contact failure	Check failed parts, repair/replace
	Controller failure	Repair/replace
	Control circuit failure	Check the circuit and the plug-ins
	Drive motor failure	Check/repair, replace if necessary
Power for the vehicle weak, response slowly and go and	Battery level low	Charge
	Parking brake not released	Release

stop now and then	Main circuit connector loosen or oxidation	Clean the connector and re-tighten
	Thermal protection system for electronic controls triggered	Reduce the load, avoid long-time carrying and climbing
12V auxiliary power supply for the vehicle fails	Fuse blown or relay failure	replace repair relay
Some auxiliary power equipment does not work	Fuse blown or switch failure	Replace the fuse, repair the switch
	Electrics failure	Repair/replace
Battery fail to charge	Charger damaged or battery not match	Replace charger
	Charging socket or wire contact problem	Repair/replace
	Charging input voltage too high or low	Stop charging or add AC voltage regulator
	Battery damaged	Replace

2 Diagnosis of Mechanical Faults

Fault	Reason	Measures
Wearing of tire not uniform	Pressure of tire too low or high	Adjust the tire pressure as stipulated
	Front wheel toe-in incorrect	Adjust as stipulated
Steering not flexible	Water in redirector case or grease freezing	Clean and add grease, replace the dust cover
	Hinge of moving parts lack of grease	Apply
	Pressure of front tire low	Adjust the tire pressure as stipulated
Free angle of steering wheel too large	Steering link ball joint loose or damaged	Repair/replace
	Steering mechanism needing adjustment or worn	Repair/replace
Braking deviation	Tire pressure uneven	Adjust the tire pressure as stipulated
	Wheel braking force uneven	Adjust the braking clearance
Insufficient braking force	Brake shoe severely worn	Replace
	Brake shoe and brake drum contact problem	Adjust the gap, repair the worn parts and improve the contact
	Grease or water on brake shoe	Clean

Chapter VI Electrical Schematic of Classic Cars

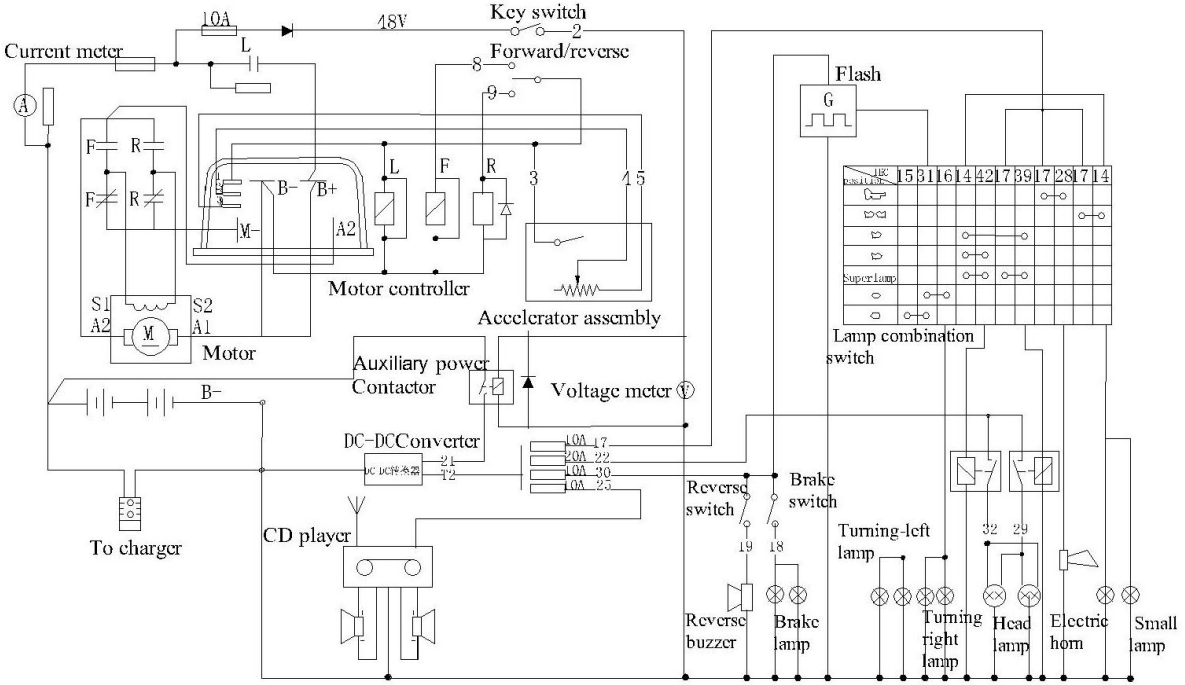

To remind users to carry out regular maintenance of vehicles, and provide important data for troubleshooting in the future, this Sheet of Monthly Maintenance is especially developed. The user shall fill in the sheet carefully and on time. Our after-sale service department has the right for supervision of monthly maintenance. Fail to fill in the sheet in time or false data will be deemed as inadequate maintenance, and any failures or loss to the vehicle thus occurred will be borne by the user.

12 copies of Sheet of Monthly Maintenance will be delivered to the user for the first year, and the user shall copy it since from the second year, perform maintenance and fill in the sheet as the schedule. The number of battery in the sheet refers to order of battery series in the vehicle, from left front to left back, then from right back to right front, as shown in the figure.

We will provide a monthly maintenance service free of charge within three months commencing from the date of ex-factory, and fill in the maintenance sheet;
We will provide maintenance services after expiration, and for standard fee, contact our after-sale department.

Sheet of Monthly Maintenance												
Record by		Vehicle Number				Date						
Checked items		Normal		Abnormal		Remarks						
Level of brake fluid reservoir												
Service brake and parking brake												
Tire pressure, and tire nuts												
Body and frame												
Front/rear axle												
Batteries, electronic controls, motor connecting cable		1		2		3		4		5		6	
Auxiliary electrical appliances		7		8		9		10		11		12	
Density of electrolyte before charging of the battery ($1.13g/cm^3$ or higher)		1		2		3		4		5		6	
Density of electrolyte after charging of the battery (1.28±0.01g/cm3 or higher)		7		8		9		10		11		12	
Note: if density of electrolyte of certain battery is not in the normal range, notify our after-sales department for further testing and maintenance.													

Chapter VIII Warranty

Guangdong Yatian Industrial Co., Ltd will provide warranty service under the following terms, conditions and restrictions within the warranty period.

1 Scope of responsibility

The responsibility of Guangdong Yatian Industrial Co., Ltd is to repair the products free of charge within the warranty period according to the warranty agreement. We will not be responsible for any incidental damages. Any warranty service relating to our products should be performed by our designated departments.

Warranty period of the vehicle:

Note: if the warranty period described in this manual is not consistent with that in the purchase contract, the one in the purchase contract shall prevail.

Service within warranty period:

For any defects due to materials quality and manufacturing process within the warranty period, we will provide free maintenance. New or repaired parts may be used.

2 Items uncovered in the warranty range

- Glass, light bulbs, lamp, fuse (pipe), rubber products, rear mirrors, brake friction shoe, motor brushes and other wearing parts is not within the warranty coverage. The users shall check the appearance of the vehicle for damage or malfunction as acceptance of the vehicle.
- Normal wearing or damage of tires during usage of vehicles.
- Any damage or failure caused by accidents of the vehicle.
- Any faults caused by invalid operations not following the manual.
- Any damage due to inadequate or improper care.
- Any damage to the vehicle due to modifications, additions or changes to important parts for the finished assembled vehicle.
- Any direct or indirect damage due to fail to repair the product/parts in the unit designated by us, or failure or damage thus occurred.
- Any loss caused by force majeure.

Chapter IX List of Accompanying Accessories

1. Manual …..1set
2. Conformity Certificate … .. 1set
3. Accompanying Repair Tools… … … … … … … … … … … … … … … … … … … …

Guangdong Yatian Industrial Co., Ltd
Address： No.17 Fengying Road, Taiping town, Conghua, Guangzhou,China.
Tel：86-20-87671260
sales：+86 138 2625 1408
Postalcode：510900
Email：sales@gdyatian.com
Website：www.gdyatian.com